TECHNICAL DATASHEET

TAB EFB STOP&GO SG75

ORDER INFORMATION

TAB ID
212075

Short Code
SG75

DIN Marking
58014 EFB

EAN Code
3838807047709

Quantity per EU/CNT pallet
42/72 pcs

TECHNICAL INFORMATION

Voltage (V)
12

Capacity C20 (Ah)
75

CCA -18°C EN (A)
730

RC (min)
130

LxWxH (mm)
315x175x175

Total Weight (kg)
18.2

TECHNOLOGY

Primary Function
Start/Stop Functionality

Battery Technology
EFB - Enhanced Flooded Battery

Grid Type (pos/neg)
Expanded/Concasted

Grid Alloy (pos/neg)
Ca/Ca

Separator
PE

Electrolyte (g/cm3)
1,28

BOX DESIGN

Box Type
L4B

Cover Type
SMF

Colour
Black

Layout
0

BHD
B13

Terminal
1

DRAWING

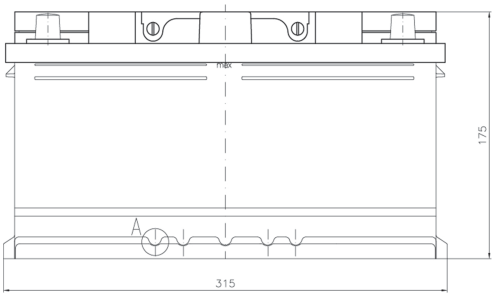

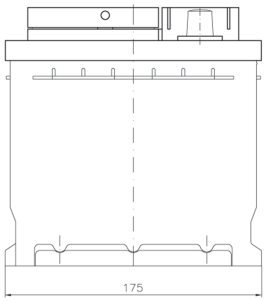

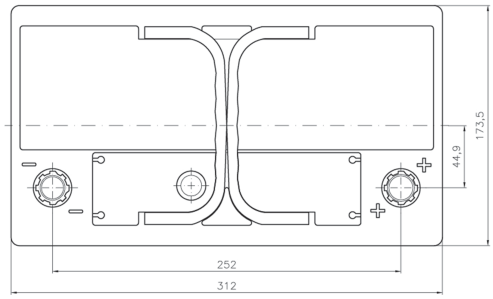

BHD

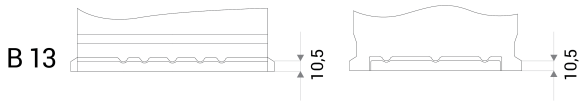

LAYOUT

0

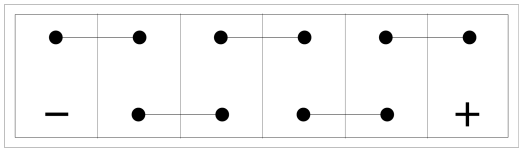

TERMINAL

1

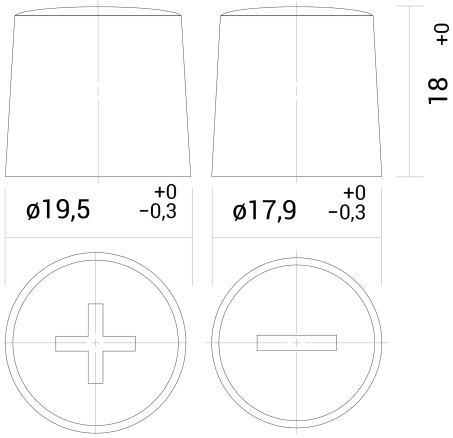

TECHNICAL DATASHEET

TAB EFB STOP&GO SG75

TAB d.d, Polena 6, SI-2392 Mežica, Slovenia, www.tab.si